Complete multi-way door entry kits

AIPHONE

VIDEO DOOR ENTRY SYSTEMS

Trusted Quality

Easy to Install

2017 Catalogue

A fresh approach to audio and video door entry solutions

With a proven track record of providing robust and highly reliable door entry systems, and founded on the principles of manufacturing quality products that are designed to be easy to install and even easier to use, Aiphone has become one of the world's largest and trusted communication solutions brands.

- **Robust, ultra reliable and easy to install**
- **Just two wires for audio and two wires for video**
- **All Aiphone kits are backed by a 3 Year Warranty as standard**

GT Kits

The GT system is a flexible and easy to use video intercom system for small multi-tenant buildings to large private housing developments.

It has also proved to be popular with installers looking for a cost effective and aesthetically attractive solution for commercial buildings, education campuses and healthcare environments.

Supporting up to 500 video intercom stations, the GT system offers handset and hands-free communication with up to 4 security guard stations and 16 entry panels, which are equipped with 170 degree PTZ cameras to enable tenants to have clear visibility of visitors.

With a recently upgraded camera unit and new monitor stations that take advantage of the clearer picture, the GT is now available in a number of competitively priced kits, enabling you to match different types and number of stations to your individual project requirements.

Unlike competitors' products where the number of wired required increases depending on the number of door stations, **GT system only requires 2 wires** for audio and 2 wires for video, regardless of the number of stations.

Complete multi-way door entry kits

Aiphone door entry kits include all the components you need to install out of the box. Quote just one product code when you place your order.

GT Surface Door Station Kits

- **3.5 Inch Monitor**

		TRADE PRICE
1 WAY	GT-1M3/VS	£442.73
2 WAY	GT-2M3/VS	£614.79
3 WAY	GT-3M3/VS	£1,078.11
4 WAY	GT-4M3/VS	£1,234.04
5 WAY	GT-5M3/VS	£1,476.83
6 WAY	GT-6M3/VS	£1,634.24
7 WAY	GT-7M3/VS	£1,790.91
8 WAY	GT-8M3/VS	£1,946.84
9 WAY	GT-9M3/VS	£2,142.86
10 WAY	GT-10M3/VS	£2,300.27

GT Flush Door Station Kits

- **3.5 Inch Monitor**

		TRADE PRICE
1 WAY	GT-1M3/VF	£427.71
2 WAY	GT-2M3/VF	£598.46
3 WAY	GT-3M3/VF	£1,054.35
4 WAY	GT-4M3/VF	£1,210.28
5 WAY	GT-5M3/VF	£1,438.22
6 WAY	GT-6M3/VF	£1,595.63
7 WAY	GT-7M3/VF	£1,752.30
8 WAY	GT-8M3/VF	£1,908.23
9 WAY	GT-9M3/VF	£2,124.29
10 WAY	GT-10M3/VF	£2,281.70

Just two wires for audio and two more wires for video*

GT Stainless Steel Door Station Kits

- 3.5 Inch Monitor

		TRADE PRICE
1 WAY	GT-1M3/VSS	£513.39
2 WAY	GT-2M3/VSS	£719.92
3 WAY	GT-3M3/VSS	£1,088.86
4 WAY	GT-4M3/VSS	£1,251.37
5 WAY	GT-5M3/VSS	£1,513.29
6 WAY	GT-6M3/VSS	£1,677.31
7 WAY	GT-7M3/VSS	£1,839.92
8 WAY	GT-8M3/VSS	£2,003.04
9 WAY	GT-9M3/VSS	£2,273.13
10 WAY	GT-10M3/VSS	£2,437.12

GT Stainless Steel Flush Door Station Kits

- 3.5 Inch Monitor

		TRADE PRICE
1 WAY	GT-1M3/VFS	£486.11
2 WAY	GT-2M3/VFS	£688.45
3 WAY	GT-3M3/VFS	£1,048.40
4 WAY	GT-4M3/VFS	£1,211.02
5 WAY	GT-5M3/VFS	£1,462.43
6 WAY	GT-6M3/VFS	£1,626.42
7 WAY	GT-7M3/VFS	£1,789.67
8 WAY	GT-8M3/VFS	£1,952.18
9 WAY	GT-9M3/VFS	£2,228.58
10 WAY	GT-10M3/VFS	£2,392.57

*See wiring diagrams on page 11.

Entrance stations, bus controllers and power supplies included with handsets/monitors, as pictured.

GT Stainless Steel Surface Door Station Kits with Door Release Keypads

- 3.5 Inch Monitor

		TRADE PRICE
1 WAY	GT-1M3/VSS+AC10U	£661.76
2 WAY	GT-2M3/VSS+AC10U	£836.58
3 WAY	GT-3M3/VSS+AC10U	£1,238.85
4 WAY	GT-4M3/VSS+AC10U	£1,401.36
5 WAY	GT-5M3/VSS+AC10U	£1,671.44
6 WAY	GT-6M3/VSS+AC10U	£1,831.82
7 WAY	GT-7M3/VSS+AC10U	£1,998.68
8 WAY	GT-8M3/VSS+AC10U	£2,161.19
9 WAY	GT-9M3/VSS+AC10U	£2,360.00
10 WAY	GT-10M3/VSS+AC10U	£2,524.00

GT Stainless Steel Flush Door Station Kits with Door Release Keypads

- 3.5 Inch Monitor

		TRADE PRICE
1 WAY	GT-1M3/VFS+AC10U	£624.84
2 WAY	GT-2M3/VFS+AC10U	£710.97
3 WAY	GT-3M3/VFS+AC10U	£1,187.99
4 WAY	GT-4M3/VFS+AC10U	£1,401.36
5 WAY	GT-5M3/VFS+AC10U	£1,626.89
6 WAY	GT-6M3/VFS+AC10U	£1,790.89
7 WAY	GT-7M3/VFS+AC10U	£1,954.13
8 WAY	GT-8M3/VFS+AC10U	£2,116.64
9 WAY	GT-9M3/VFS+AC10U	£2,315.45
10 WAY	GT-10M3/VFS+AC10U	£2,479.45

Complete multi-way door entry kits

Entrance stations, bus controllers and power supplies included with handsets/monitors, as pictured.

GT Surface Audio Kits

		TRADE PRICE
1 WAY	GT-1D/AS	£224.72
2 WAY	GT-2D/AS	£245.25
3 WAY	GT-3D/AS	£265.27
4 WAY	GT-4D/AS	£284.78
5 WAY	GT-5D/AS	£350.85
6 WAY	GT-6D/AS	£371.37
7 WAY	GT-7D/AS	£391.39
8 WAY	GT-8D/AS	£410.91
9 WAY	GT-9D/AS	£487.49
10 WAY	GT-10D/AS	£508.01

GT Flush Audio Kits

		TRADE PRICE
1 WAY	GT-1D/AF	£207.83
2 WAY	GT-2D/AF	£228.80
3 WAY	GT-3D/AF	£249.22
4 WAY	GT-4D/AF	£269.21
5 WAY	GT-5D/AF	£333.33
6 WAY	GT-6D/AF	£353.85
7 WAY	GT-7D/AF	£373.87
8 WAY	GT-8D/AF	£393.39
9 WAY	GT-9D/AF	£461.46
10 WAY	GT-10D/AF	£481.98

GT Vandal Resistant Surface Audio Kits

		TRADE PRICE
1 WAY	GT-1D/ASS	£250.38
2 WAY	GT-2D/ASS	£275.34
3 WAY	GT-3D/ASS	£299.36
4 WAY	GT-4D/ASS	£323.75
5 WAY	GT-5D/ASS	£401.95
6 WAY	GT-6D/ASS	£426.91
7 WAY	GT-7D/ASS	£451.37
8 WAY	GT-8D/ASS	£475.32
9 WAY	GT-9D/ASS	£552.89
10 WAY	GT-10D/ASS	£577.85

GT Vandal Resistant Flush Audio Kits

		TRADE PRICE
1 WAY	GT-1D/AFS	£227.85
2 WAY	GT-2D/AFS	£252.81
3 WAY	GT-3D/AFS	£277.27
4 WAY	GT-4D/AFS	£301.23
5 WAY	GT-5D/AFS	£374.67
6 WAY	GT-6D/AFS	£399.63
7 WAY	GT-7D/AFS	£419.15
8 WAY	GT-8D/AFS	£448.05
9 WAY	GT-9D/AFS	£518.61
10 WAY	GT-10D/AFS	£543.57

Trusted Quality, Easy to install

GT Vandal Resistant Surface Audio Kits with Access Keypads

		TRADE PRICE
1 WAY	GT-1D/ASS+AC10U	£338.71
2 WAY	GT-2D/ASS+AC10U	£363.67
3 WAY	GT-3D/ASS+AC10U	£388.13
4 WAY	GT-4D/ASS+AC10U	£412.09
5 WAY	GT-5D/ASS+AC10U	£489.65
6 WAY	GT-6D/ASS+AC10U	£514.61
7 WAY	GT-7D/ASS+AC10U	£539.07
8 WAY	GT-8D/ASS+AC10U	£563.03
9 WAY	GT-9D/ASS+AC10U	£665.14
10 WAY	GT-10D/ASS+AC10U	£690.10

GT Vandal Resistant Surface Audio Kits with Access Keypads

		TRADE PRICE
1 WAY	GT-1D/AFS+AC10U	£311.44
2 WAY	GT-2D/AFS+AC10U	£334.10
3 WAY	GT-3D/AFS+AC10U	£360.85
4 WAY	GT-4D/AFS+AC10U	£384.81
5 WAY	GT-5D/AFS+AC10U	£455.37
6 WAY	GT-6D/AFS+AC10U	£480.33
7 WAY	GT-7D/AFS+AC10U	£504.78
8 WAY	GT-8D/AFS+AC10U	£528.74
9 WAY	GT-9D/AFS+AC10U	£635.11
10 WAY	GT-10D/AFS+AC10U	£660.07

JP One Way Video Kits

The slim, elegant JP touchscreen intercom system has a large 7” monitor and is packed with clever, practical features that make it one of the most flexible and cost effective intercom systems available for small offices and large residential home projects. It comes complete with a built-in 170 degree wide angle camera and digital PTZ.

		TRADE PRICE
1 WAY FLUSH VR	JPS-4AEDV	£859.00
1 WAY SURFACE VR	JPS-4AEDV	£859.00

JO One Way Video Kits

The JO system with touch control is equipped with a stylishly designed 7” monitor.

		TRADE PRICE
1 WAY FLUSH VR	JOS-1F	£499.00
1 WAY SURFACE VR	JOS-1V	£499.00

DA Surface Audio Kits

Answer calls and unlock an entrance with simple, intuitive operation. Ready to be installed kits with just two wires required from a door station to each handset.

		TRADE PRICE
1 WAY	DA-1AS	£47.43
2 WAY	KITDA2	£80.27
3 WAY	KITDA3	£104.03
4 WAY	KITDA4	£125.05

Generic GT Video System Wiring Example

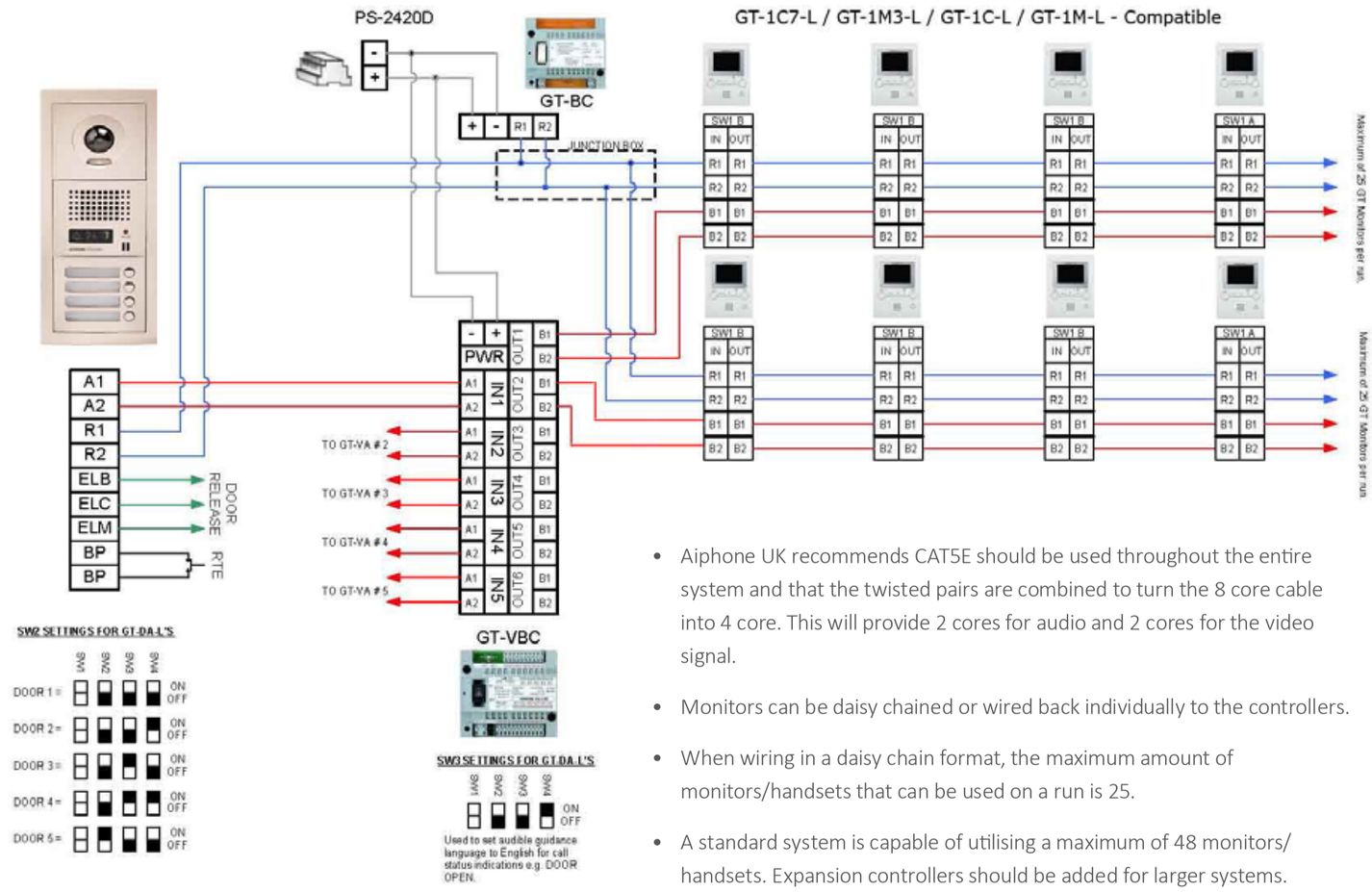

- Aiphone UK recommends CAT5E should be used throughout the entire system and that the twisted pairs are combined to turn the 8 core cable into 4 core. This will provide 2 cores for audio and 2 cores for the video signal.
- Monitors can be daisy chained or wired back individually to the controllers.
- When wiring in a daisy chain format, the maximum amount of monitors/handsets that can be used on a run is 25.
- A standard system is capable of utilising a maximum of 48 monitors/ handsets. Expansion controllers should be added for larger systems.

Generic GT Audio System Wiring Example

- Aiphone UK recommends CAT5E should be used throughout the entire system and that the twisted pairs are combined to turn the 8 core cable into 4 core. This will provide 2 cores for audio and 2 cores will be spare.
- Monitors can be daisy chained or wired back individually to the controllers.
- When wiring in a daisy chain format, the maximum amount of monitors/handsets that can be used on a run is 25.
- A standard system is capable of utilising a maximum of 48 monitors/handsets. Expansion controllers should be added for larger systems.

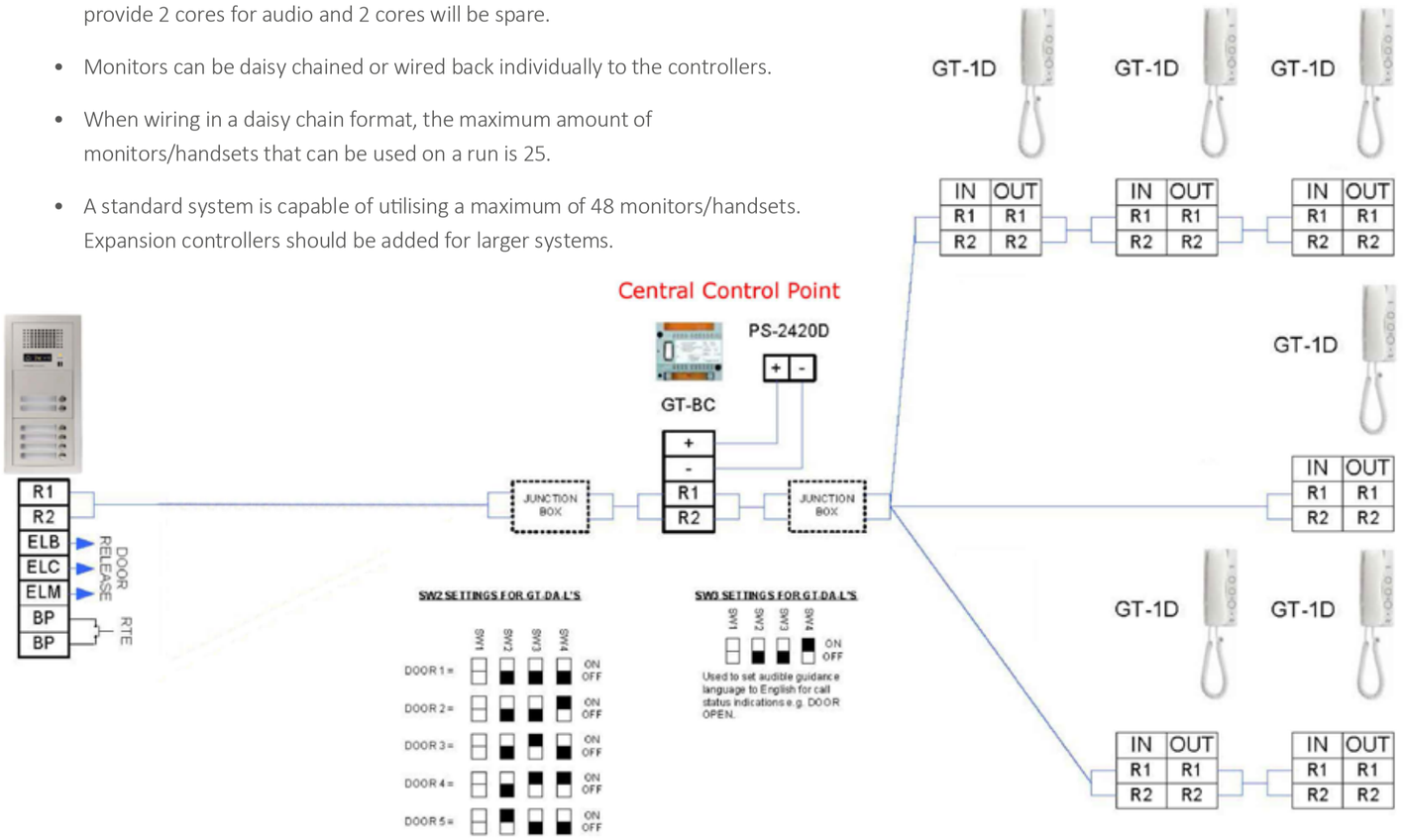

PLEASE NOTE A MAXIMUM OF 25 GT INTERCOMS PER CABLE RUN

Life has just got easier for installers

Complete multi-way door entry kits

Aiphone door entry kits include all the components you need to install out of the box. Quote just one product code when you place your order.

AIPHONE

VIDEO DOOR ENTRY SYSTEMS

The future of intercom security

For more information on Aiphone solutions available in the UK, visit **www.aiphone.co.uk** or call **0207 507 6250**